Johann Wolfgang Goethe-Universität
Frankfurt am Main
Institut für Angewandte Physik (IAP)

The Multi-Cell SC CH-Cavity

A.Sauer, H.Podlech, H. Liebermann, U.Ratzinger

Workshop on the Advanced Design of Spoke Resonators

October 7 and 8, 2002
Los Alamos, NM, USA

Content

- The H_{210}-mode
- Prototype development
- Possible applications
- Conclusions

The H_{210}-mode

➔ 4-Vane-RFQ with short circuited dipole modes:

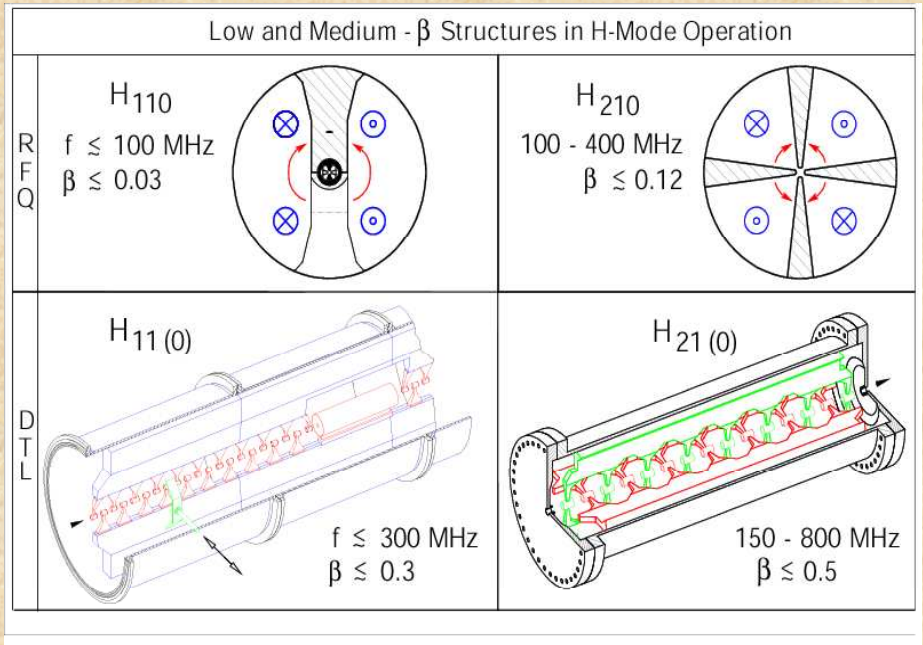

➔ Cross-Bar-Array:

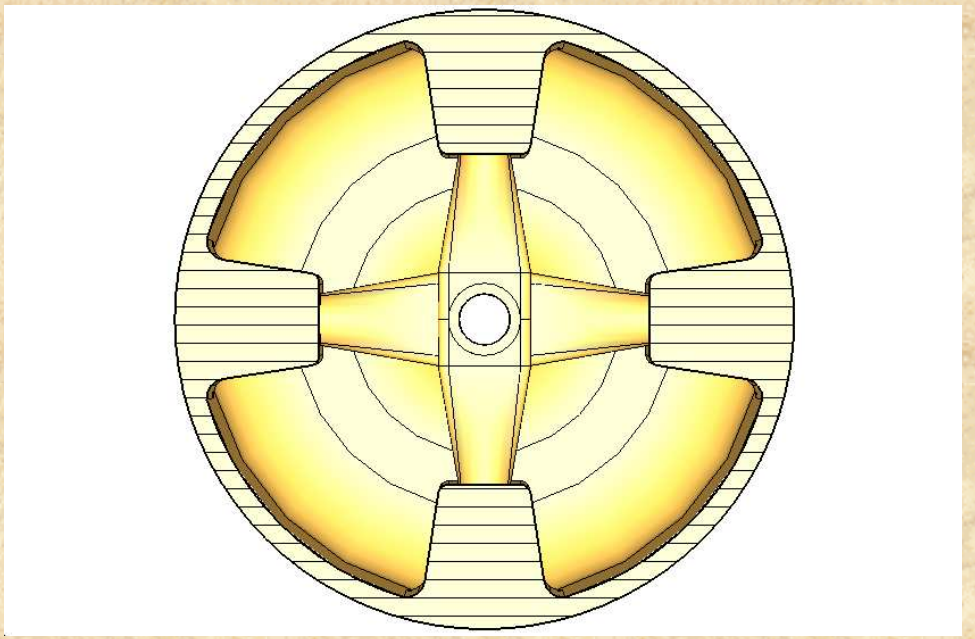

Prototype developments

➔ rt CH copper model: 1.) Analyzing higher order modes (near future) and field flatness, 2.) Optimization of end cell geometry

➔ sc prototype geometry based on Micro-wave Studio simulations (protons,I=200❍A)

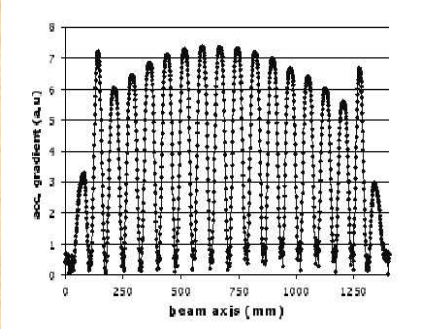

On axis field (bead pull setup)

Frequency:	**352 MHz**
Beta:	**0.1**
Tank length:	**1.06 m**
Number of gaps:	**19**
DT diameter	**2.5 cm**
E_{acc}	**5.0 MV/m**
B_{peak}	**36 mT**
E_{peak}	**25 MV/m**
Tank diameter	**29 cm**

➔ Detailed views of the prototype:

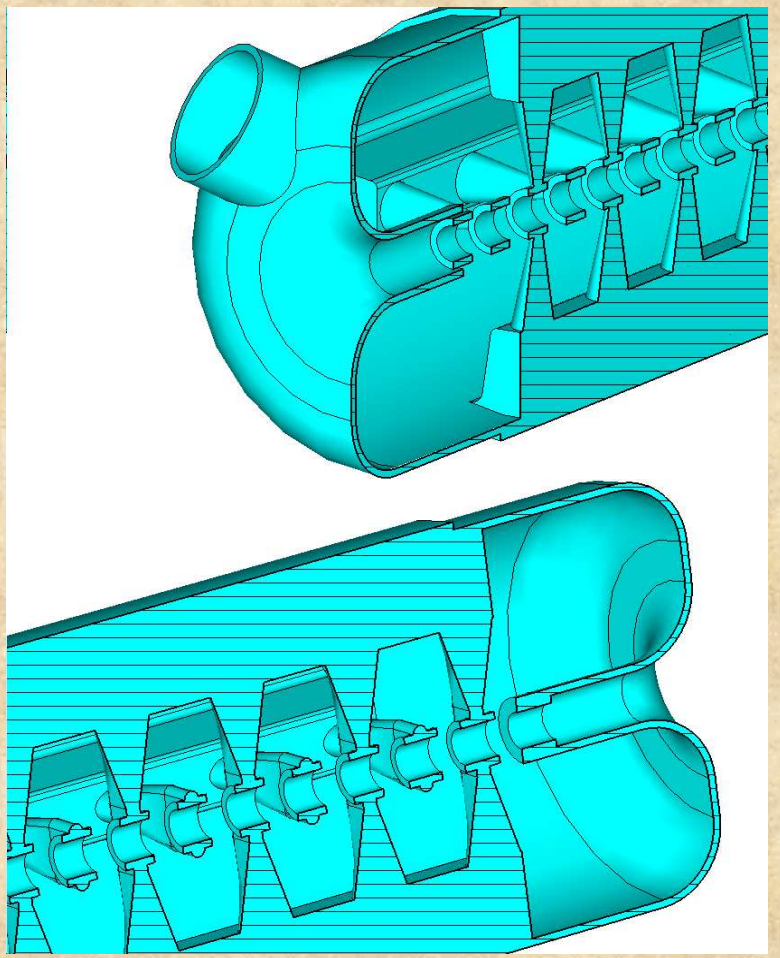

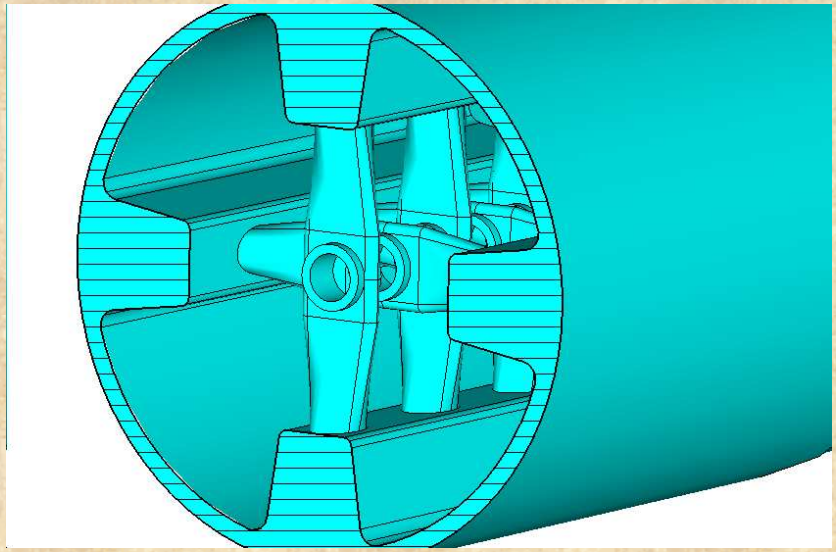

➔ Microphonics simulations studies underway with the program COSMOS

➔ Lorentz force detuning simulations up to now not planned (cw operation and low acceleration fields $E_{acc} \approx 5$ MV/m)

➔ Status of the cryogenic laboratory: Cryostat, magnetic shielding, laminar flow box class 100, fluid He from TU-Darmstadt in 250 l dewars, He recovery system

➔ Technical design in progress and in close cooperation with industry:

- bulk Niobium
- RRR-value: ≥ 250
- material costs: ≈ 100 k$
- thickness about 3 mm
- 4 K operation temperature (first step)
- 100 W Amplifier is foreseen (variable frequency 300 – 600 MHz)
- connection of the resonator components with electron beam welding
- magnetic coupling (first attempt) but with options for electric coupling

➡ at present call for tenders for prototype fabrication

Possible applications:

➔ cw 350/700 MHz, < 40 mA, 100 MeV proton beams for ADS (Accelerator Driven System)

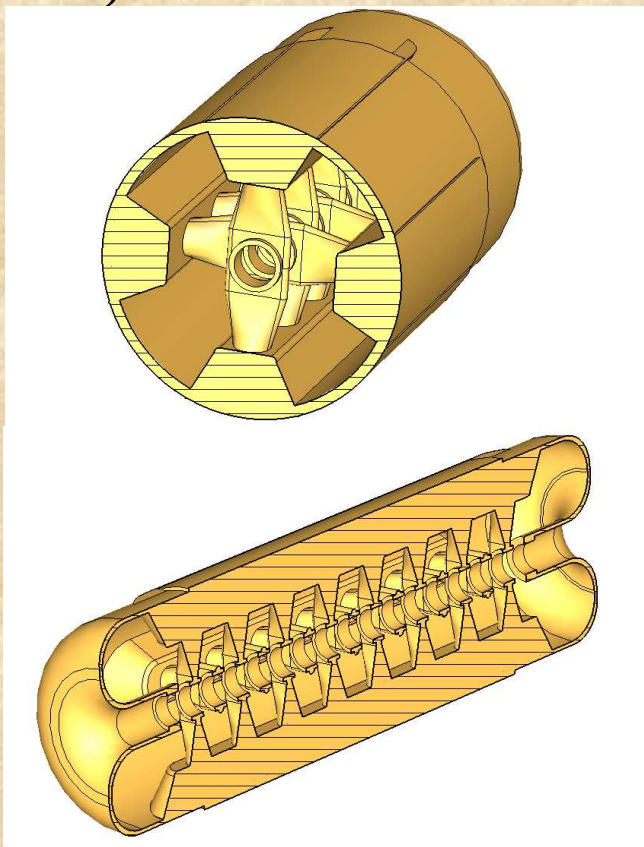

Beta:	**0.1**	**c**
Frequency:	**350.43**	**MHz**
E_{acc}:	**5.29**	**MV/m**
E_{peak}:	**25.1**	**MV/m**
B_{peak}:	**44.6**	**mT**
Tank length:	**0.936**	**m**
Drift tube diameter:	**4.0**	**cm**
Tank diameter:	**26.8**	**cm**
Number of gaps:	**16**	
E_{peak}/E_{acc}:	**4.75**	
B_{peak}/E_{acc}:	**8.43**	**mT/MV/m**

➔ cw 175 MHz, 125 mA, 40 MeV deuteron beams for IFMIF (International Fusion Material Irradiation Facility)

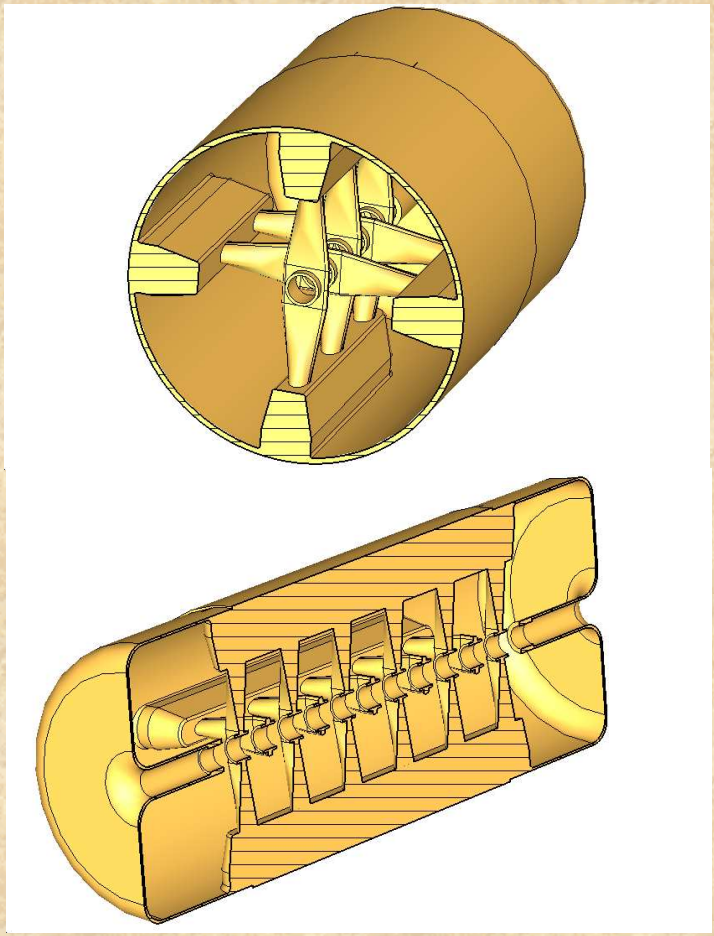

Preliminary (Optimization necessary)

Beta:	**0.1**	**c**
Frequency:	**174.86**	**MHz**
E_{acc}:	**5.35**	**MV/m**
E_{peak}:	**38.7 → < 30**	**MV/m**
B_{peak}:	**49.1**	**mT**
Tank length:	**1.52**	**m**
Drift tube diameter:	**5.0**	**cm**
Tank diameter:	**58.0**	**cm**
Number of gaps:	**12**	
E_{peak}/E_{acc}:	**7.23**	
B_{peak}/E_{acc}:	**9.17**	**mT/MV/m**

- Dedicated for the KONUS (Kombinierte Null Grad Struktur) concept
  - → long lens-free sections

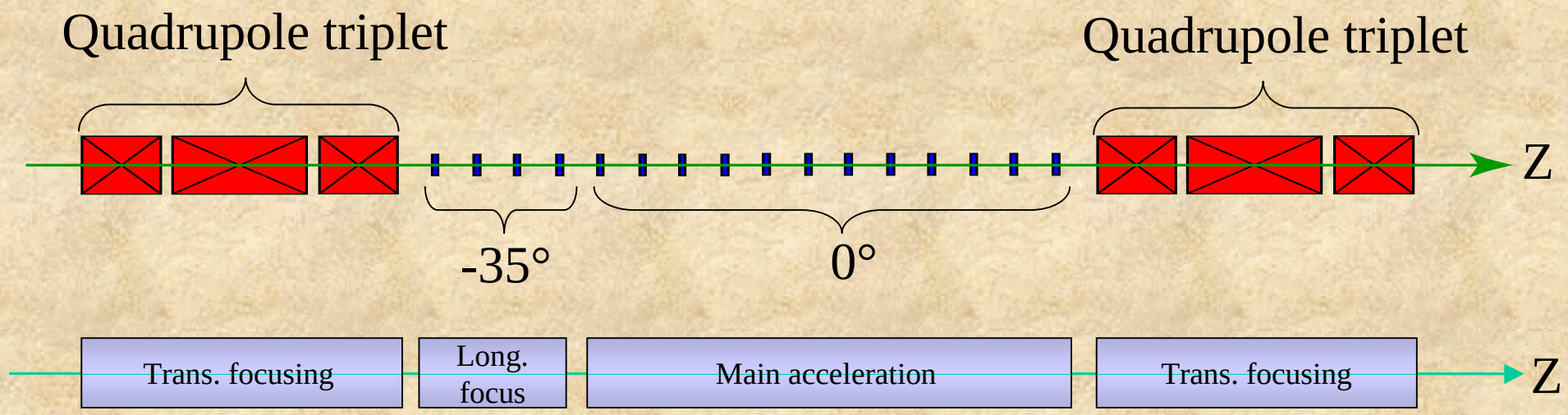

Conclusions

- The sc CH-capabilities are promising
- Multicell sc CH design is attractive for fixed velocity, high current linacs
- Prototype development is in progress
- The first sc CH prototype cavity is expected to be ready for testing at the end of 2003

For more informations: Internet: http://iap-ffm.de

Email: **h.podlech@iap.uni-frankfurt.de || a.sauer@iap.uni-frankfurt.de**